Ocularis ES Communication

Ocularis ES Communication Flow

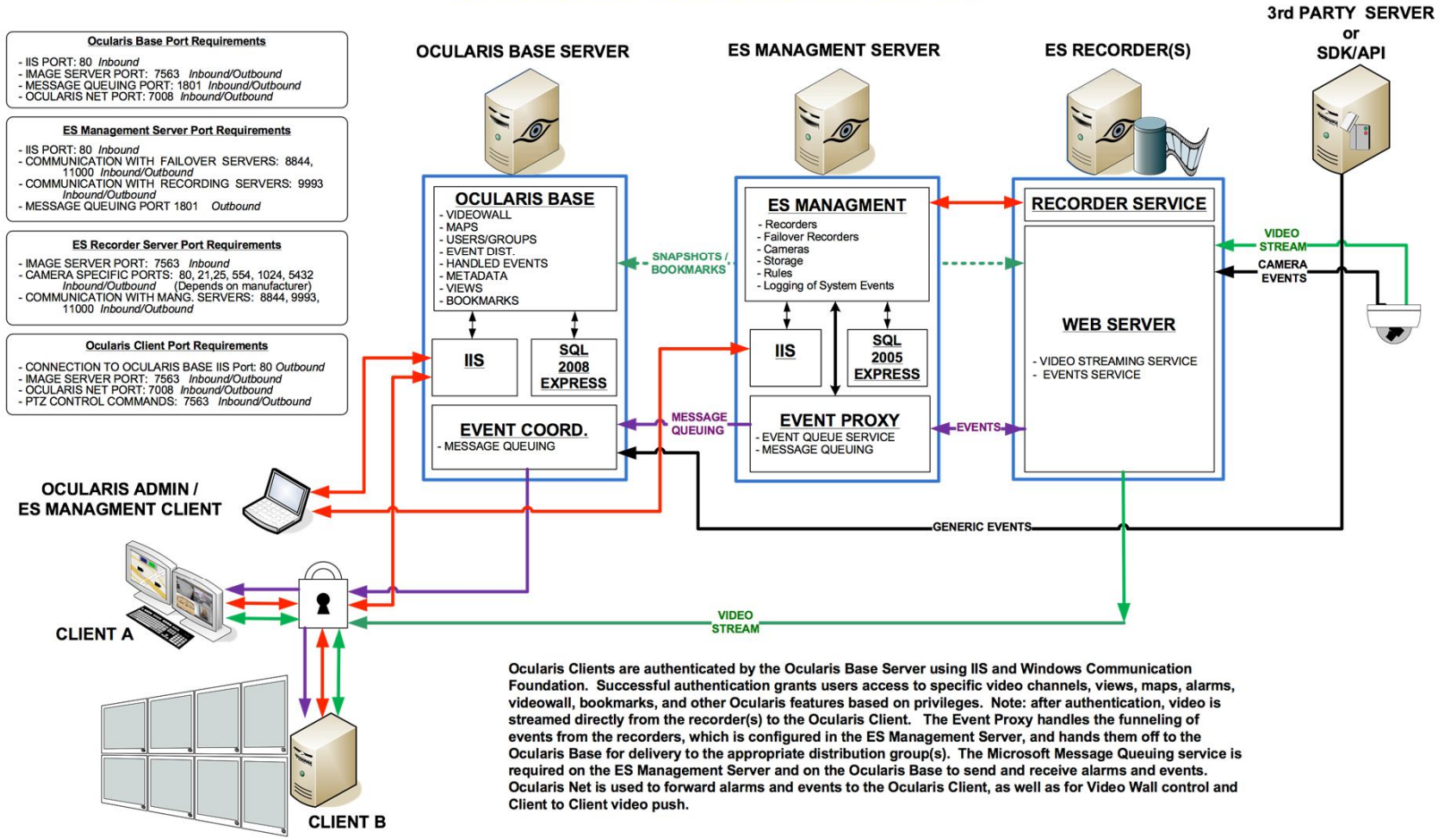

Ocularis Clients are authenticated by the Ocularis Base Server using IIS and Windows Communication Foundation. Successful authentication grants users access to specific video channels, views, maps, alarms, videowall, bookmarks, and other Ocularis features based on privileges. Note: after authentication, video is streamed directly from the recorder(s) to the Ocularis Client. The Event Proxy handles the funneling of events from the recorders, which is configured in the ES Management Server, and hands them off to the Ocularis Base for delivery to the appropriate distribution group(s). The Microsoft Message Queuing service is required on the ES Management Server and on the Ocularis Base to send and receive alarms and events. Ocularis Net is used to forward alarms and events to the Ocularis Client, as well as for Video Wall control and Client to Client video push.

© OnSSI. All Rights Reserved.